FAIRCHILD SEMICONDUCTOR™

BAT54/A/C/S

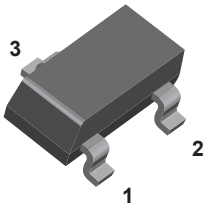

Top Marking

BAT54 = L4P
BAT54A = L42
BAT54C = L43
BAT54S = L44

Connection Diagrams:

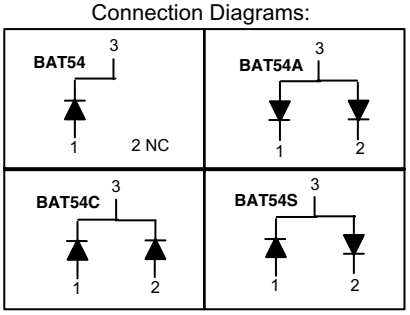

Schottky Barrier Diode

Sourced from Process KA.

Absolute Maximum Ratings* TA = 25°C unless otherwise noted

Symbol	Parameter	Value	Units
P_D	Total Power Dissipation @ 25°C	230	mW
I_{FSM}	Non-repetitive Peak Forward Surge Current, Pulse Width = 1 sec	600	mA
I_{FM}	DC Forward Current	200	mA
I_F	Recurrent Peak Forward Current	300	mA
T_{stg}	Storage Temperature Range	-55 to +150	°C
T_J	Operating Junction Temperature	-55 to +150	°C
$R_{\theta JA}$	Thermal Resistance, Junction to Ambient **	430	°C/W
W_{IV}	Working Inverse Voltage	25	V

*These ratings are limiting values above which the serviceability of any semiconductor device may be impaired.

**Mounted on ceramic substrate 10mm x 8mm x 0.6mm.

Electrical Characteristics T_A = 25°C unless otherwise noted

Symbol	Parameter	Value	Units
V_R	Minimum Breakdown Voltage @ I_R = 10μA	30	V
I_{RM}	Maximum Reverse Current @ V_R = 25V	2	μA
V_{FM}	Maximum Forward Voltage		
	@ I_F = 100μA	240	mV
	I_F = 1mA	320	mV
	I_F = 10mA	400	mV
	I_F = 30mA	500	mV
	I_F = 100mA	1.0	V
C	Capacitance @ V_R = 1V, f = 1.0 MHz (I_R = 10mA)	10	pF
t_{rr}	Maximum Reverse Recovery Time $I_F = I_R$ = 10mA, I_{RR} =1mA, R_L =100Ω	5.0	ns

Forward Voltage vs. Temperature

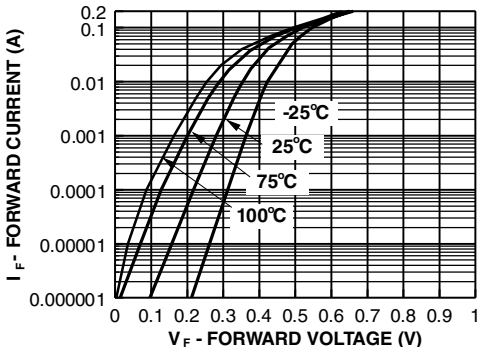

Reverse Leakage Current vs. Temperature

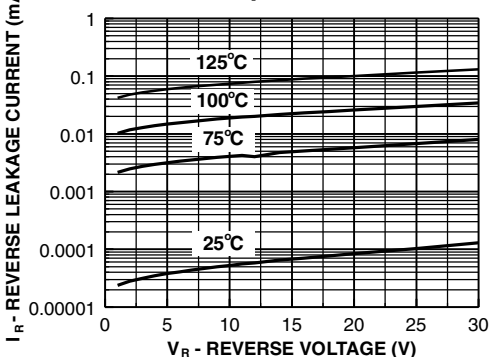

Capacitance vs. Reverse Bias Voltage